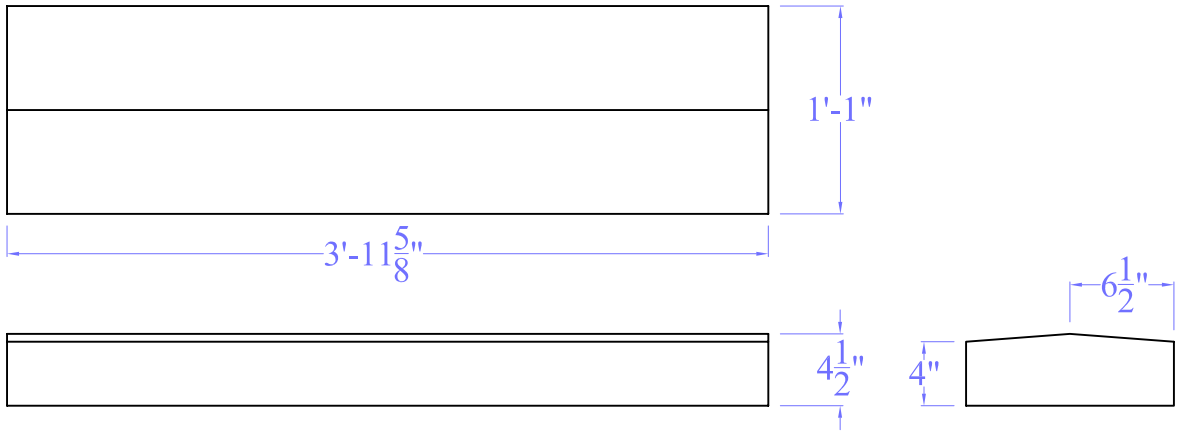

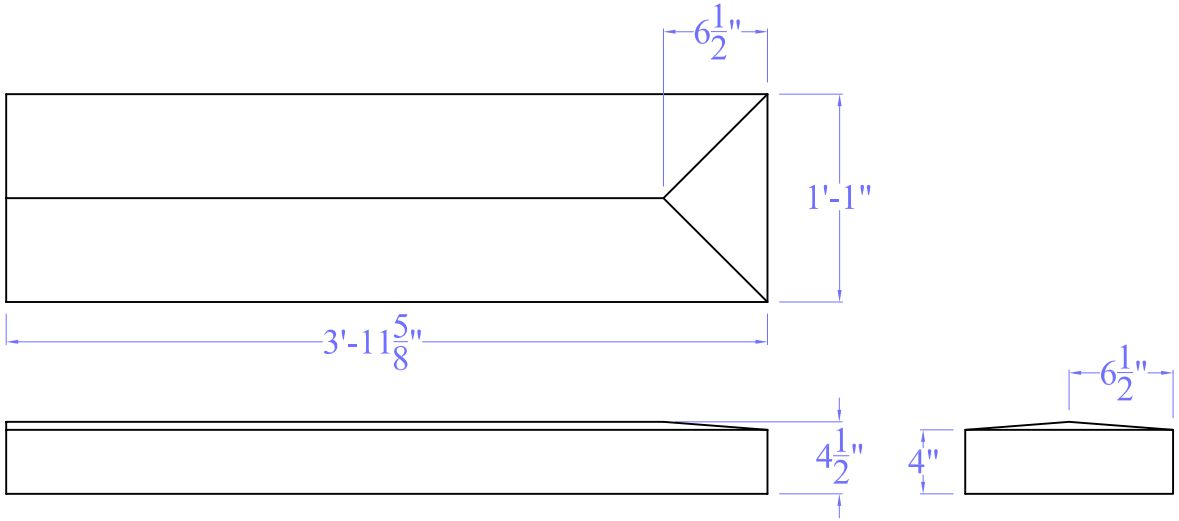

Type: Coping

Width: 13"

Height: 4 1/2"

Length: 47 5/8"

Number of Molds Available:

(8) - 47 5/8"

(1) - End

Item Number:
OPC8W5H48L1

Mold Number:
C-506

OBERFIELD'S INC

No.	Revision/Issue	Date

Firm Name and Address
Oberfield's INC
1165 Alum Creek Dr
Columbus, OH 43209
800-845-7644

Oberfield Precast Concrete

Project

Sheet

Date 11-28-05

Scale 1" = 1'-0"